Pall Corporation

Megaplast™ G2 CD Filter Housing

Description

The centrally located Drain/Vent port on the Megaplast™ CD housing head provides for efficient and rapid drainage when mounted with the bowl up, and efficient venting when mounted in the bowl down position.

The Megaplast CD has the same head mounting position design and dimensions as the Pall FlexBowl™ Housing. The comparable flat head design allows for more equipment design installation options.

The housings are designed to meet the stringent cleanliness requirements of ultrapure applications by using high purity PFA for all wetted components.

The Megaplast G2 CD housings are available in 102 mm, (4 in), 254 mm, (10 in), and 508 mm, (20 in) sizes. The 254 mm, (10 in) housing is designed to fit standard filter cartridges with a diameter of up to 82.5 mm, (3.25 in).

A selection of standard semiconductor industry inlet and outlet connection fittings are offered in different sizes and styles.

Features

- Optimized drainage and venting designs
- High-purity design
- Metal-free construction
- High temperature capability
- Closure nut is free floating

Specifications

Materials of Construction

Components	Materials
Bowl	High-purity PFA
Head	High-purity PFA
Closure nut	PVDF
O-ring[1, 2]	PFA encapsulated fluorocarbon elastomer

[1] All fluoropolymer materials made without PFOA.

[2] Other O-ring options available.

Configuration	T-flow
Maximum Operating Temperature	95 °C / 203 °F
Maximum Operating Pressure of Housing	0.56 MPaG < 30 °C / 80 psig @ 86 °F 0.38 MPaG < 60 °C / 55 psig @ 140 °F 0.28 MPaG < 95 °C / 40 psig @ 200 °F

Dimensions

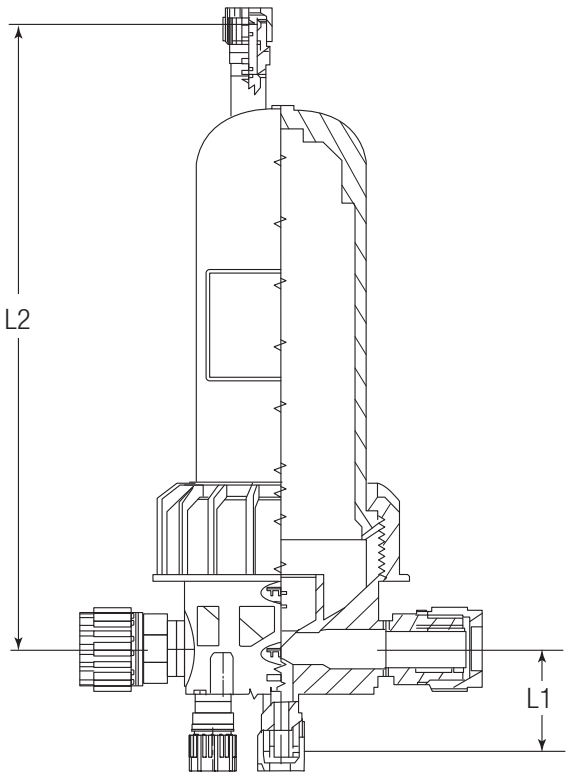

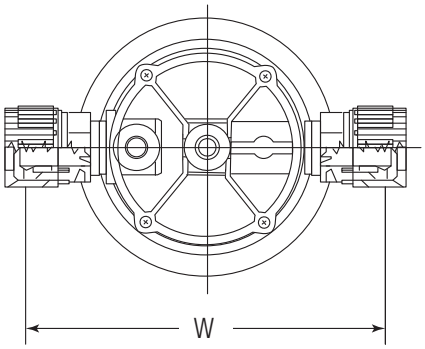

Part number	L1	L2	W
PFCD1F128SPH1B	64.5 mm (2.54 in)	388.6 mm (15.3 in)	218.9 mm (8.62 in)
PFCD1F168SPH1B	64.5 mm (2.54 in)	388.6 mm (15.3 in)	223.8 mm (8.81 in)
PFCD1F128FLH1B	66 mm (2.60 in)	366.3 mm (14.42 in)	191.3 mm (7.53 in)
PFCD1F168FLH1B	67.3 mm (2.65 in)	366.3 mm (14.42 in)	214.6 mm (8.45 in)
PFCD1F128BWH1B	59.7 mm (2.35 in)	357.3 mm (14.07 in)	198.4 mm (7.81 in)
PFCD1F168BWH1B	59.7 mm (2.35 in)	357.3 mm (14.07 in)	198.4 mm (7.81 in)
PFCD1F128NLH1B	64.5 mm (2.54 in)	388.6 mm (15.3 in)	218.9 mm (8.62 in)
PFCD1F168NLH1B	64.5 mm (2.54 in)	388.6 mm (15.3 in)	223.8 mm (8.81 in)

Typical Flow Charcteristics – 1 cP fluid, 20 °C

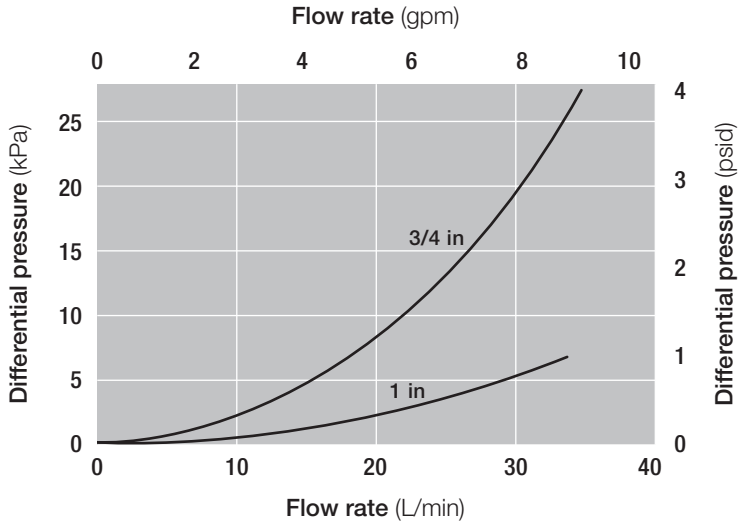

Part Numbers / Ordering Information

PFCD 1 2 3 4 5

Table 1

Code	Filter length
04	4 in
1	10 in
2	20 in

Table 2

Code	Closure nut materials
F	PVDF
P	PTFE

Table 3

Code	In / Out	Vent / Drain
128	3/4 in	1/2 in
168	1 in	1/2 in

Table 4

Code	Connections
BW	Butt Weld
FL	Flare style
SP	Pillar Super 300 P series
NL	Nano Link System

Table 5

Code	O-ring
H1B	PFA encapsulated fluorocarbon elastomer
H11F	Kalrez[6] 7075

[6] Kalrez is a trademark of Dupont

* Part numbers are not available with every option. (Refer to codes for options.)
Contact your local Pall representative for option availability.

* SPANNER WRENCH PART NUMBER : ACS0655AAHD

Pall Corporation

Microelectronics

25 Harbor Park Drive
Port Washington, NY 11050
+1 800 360 7255 toll free US
+1 516 484 3600 telephone
+1 516 801 9711 fax

Nihon Pall Ltd.
6-5-1, Nishishinjuku,
Shinjuku-ku
Tokyo 163-1325 Japan
+81 3 6901 5700 telephone
+81 3 5322 2109 fax

Visit us on the Web at microelectronics.pall.com

Pall Corporation has offices and plants throughout the world. For Pall representatives in your area, please go to www.pall.com/corporate_contact.asp.

Because of technological developments related to the products, systems, and/or services described herein, the data and procedures are subject to change without notice. Please consult your Pall representative or visit www.pall.com to verify that this information remains valid.